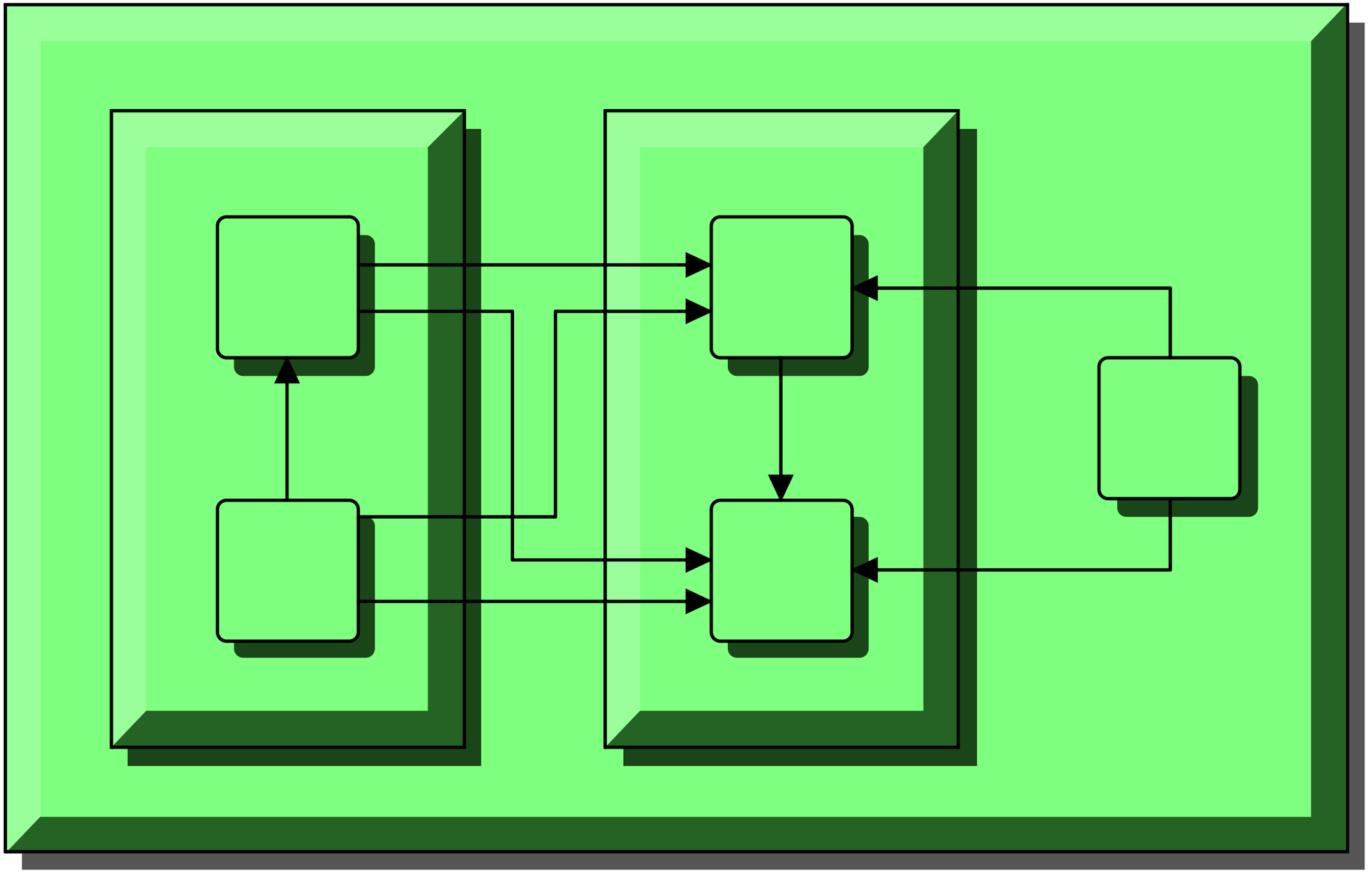

|< < Play > >| Close