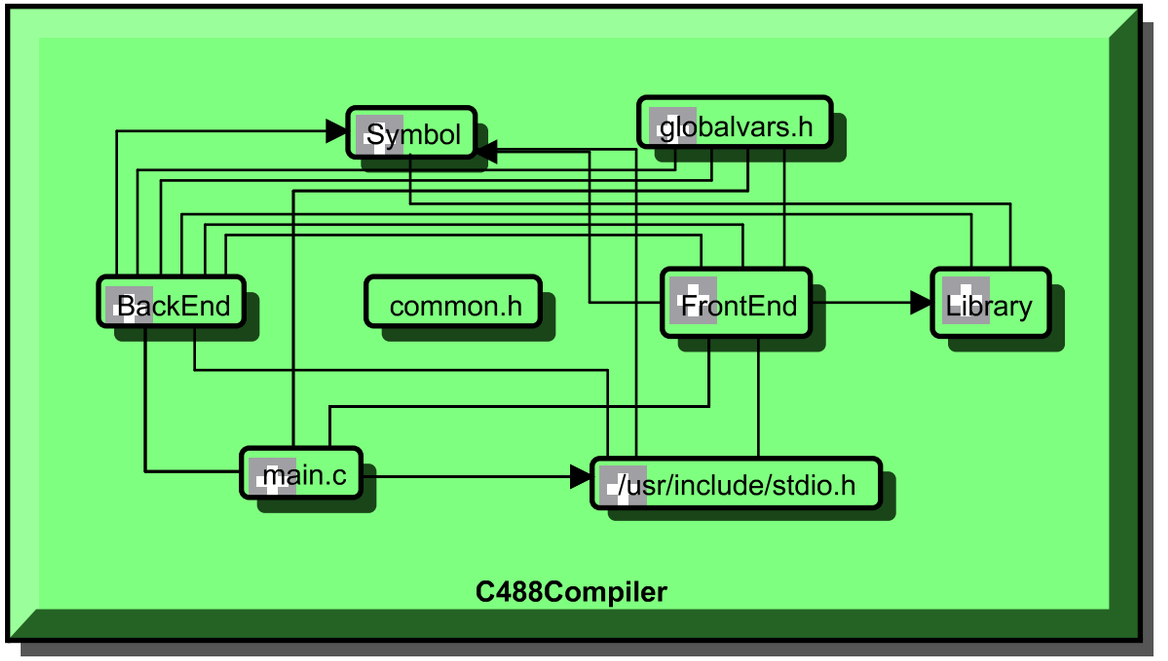
Symbol
globalvars.h
BackEnd
common.h
FrontEnd
Library
main.c
./usr/include/stdio.h
C488Compiler